MAVITEC
Green Energy

SOLE **AUSTRALIAN** DISTRIBUTOR

MAVITEC

PADDLE DEPACKER S

(5M³ / HOUR)

wasteinitiatives.com.au

PADDLE DEPACKER MODEL S

Function:

Producing a clean organic product suitable for biogas installations by separating the organic material from the packaging.

Features Paddle Depacker Model S:

- Heavy duty execution
- Simple and low maintenance design
- Compact size
- High capacity
- Variable screen sizes available
- >99,5% clean organic material
- Quick (hydraulic) opening doors for easy cleaning
- Bolt free screen exchange
- Fixed shaft execution
- Stainless steel isolated splash shields for low noise operation

Paddle Depacker Model S: $2m^3$ - $5m^3$ per hour *
Installed power: 11 kW / 15 kW / 18 kW
(estimated consumed power 60 - 80%)

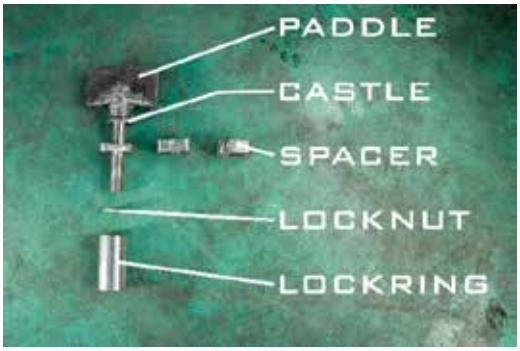

* depends on material composition

Input materials:
Hotel/Restaurant waste, Bread Products,
Food production fails, Shop return waste, Canned Products, Drums, Various Containers, Baby foods, Household products, Deodorants, Powdered milk, Potato's, Nearly all Fruits, Vegetables, Pumpkin, Shop Returns, Manure/Straw, Carrots, Corn, Coleslaw, Unpacked food, Tetra Pak Containers, Soft Packaging, Sachets, Confectionery, Pet foods, Processed meats, Tea, Beans, Cereals, Pharmaceuticals, Cosmetics, Sachets, Ice cream, Water Ice, Beverages (bottle), Beverages (can), Cigarettes, Insecticides, Sauces, Yogurt, Biscuits, Coffee, Soups, Coleslaw, Detergents, Pasta, Sugar, Potato Gratin, Plastic Bottles, Sandwiches, and many more.

PADDLE DEPACKER MODEL S LINE - SPAIN

3.5m^3 Feed Hopper (Wide) / Carbon Steel Depacker

Factory Rejects / Cans / Supermarket Returns

PADDLE DEPACKER MODEL S LINE - FINLAND

2.5m^3 Feed Hopper / Carbon Steel Depacker

Salads

PADDLE DEPACKER MODEL S LINE - ROMANIA

2.5m^3 Feed Hopper / Carbon Steel Depacker / WET & DRY

Chips / Chocolate / Dairy Products / Cookies / Factory Rejects

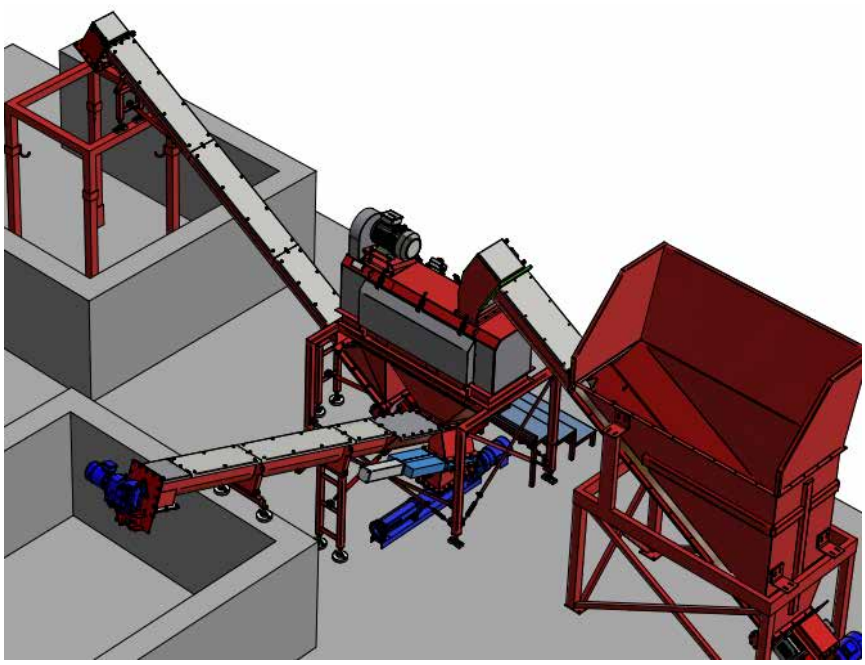

PADDLE DEPACKER MODEL S LINE - CROATIA

2.5m^3 Feed Hopper / Carbon Steel Depacker

Factory Rejects / Supermarket Returns / Bread / Fruits & Vegetables

PADDLE DEPACKER MODEL S LINE - GREECE

2.5m^3 Feed Hopper / Carbon Steel Depacker

Factory Rejects / Supermarket Returns

PADDLE DEPACKER MODEL S LINE - HUNGARY

2.5m^3 Feed Hopper / Carbon Steel Depacker / WET & DRY

Supermarket Returns / Fruits & Vegetables

PADDLE DEPACKER MODEL S LINE - LITHUANIA

2.5m^3 Feed Hopper / Carbon Steel Depacker / WET & DRY

Supermarket Returns / Fruits & Vegetables

PADDLE DEPACKER MODEL S LINE - SLOVAKIA

2.5m^3 Feed Hopper / Carbon Steel Depacker / WET & DRY

Supermarket Returns / Fruits & Vegetables / Restaurant

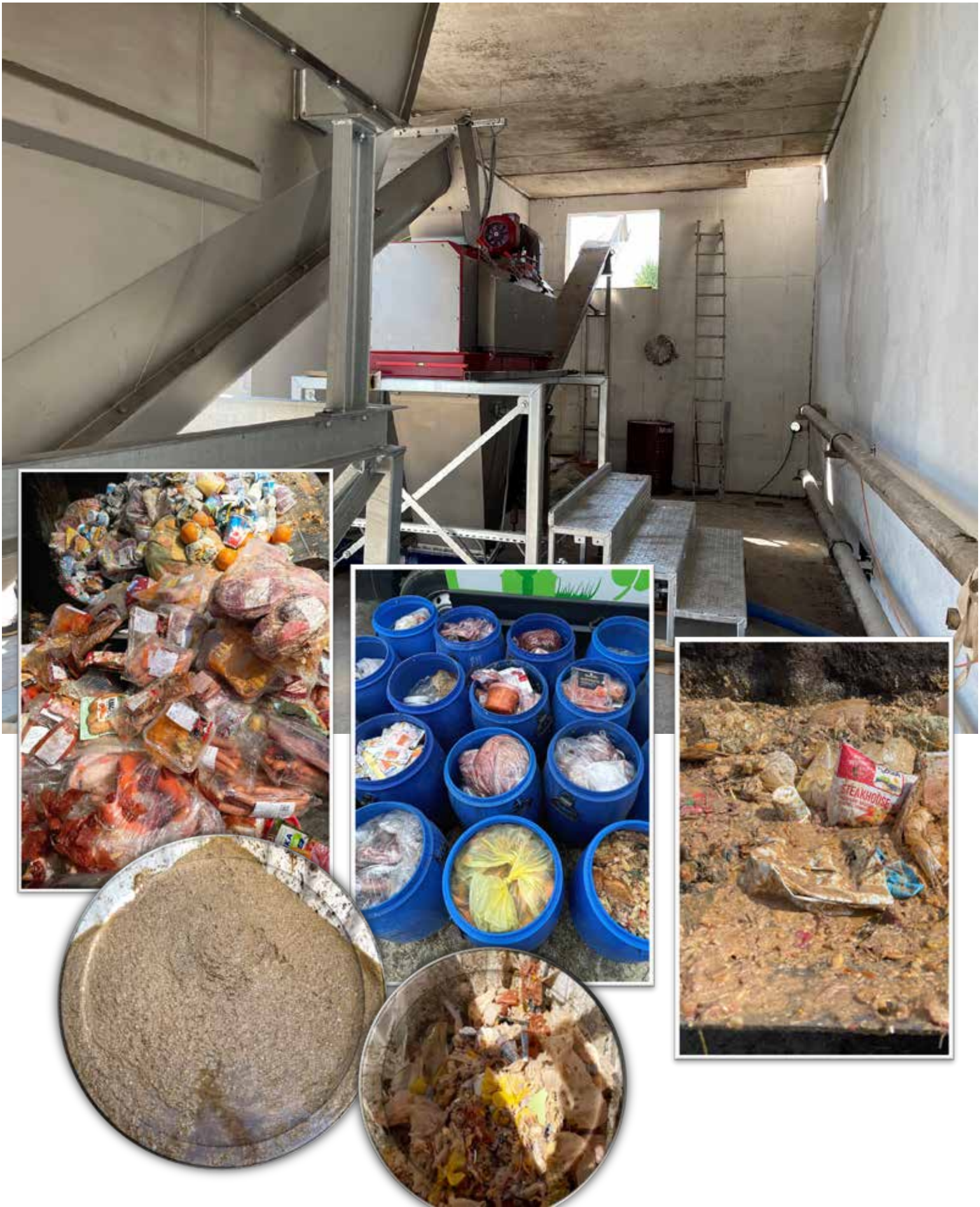

PADDLE DEPACKER MODEL S LINE - SPAIN

1m^3 Feed Hopper / Carbon Steel Depacker

Fish Products / Factory Rejects / Cans

PADDLE DEPACKER MODEL S LINE - TURKEY

1m^3 Feed Hopper / Carbon Steel Depacker

Candy / Chocolade

PADDLE DEPACKER MODEL S LINE - ITALY

1m^3 Feed Hopper / Carbon Steel Depacker

Supermarket Return / Factory Rejects / Dairy Products

PADDLE DEPACKER MODEL S LINE - FRANCE

Customer Skid / Carbon Steel Depacker

Supermarket Return / Fruits & Vegetables

PADDLE DEPACKER MODEL S LINE - CZECH REPUBLIC

3m^3 Feed Hopper / Carbon Steel Depacker / Dry Discharge

Cookies / Chocolate

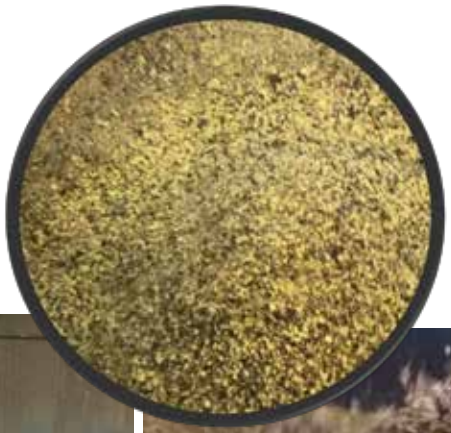

PADDLE DEPACKER MODEL S LINE - CROATIA

2.5m^3 Feed Hopper / Carbon Steel Depacker / Pit

Organic Household / Restaurant Waste

PADDLE DEPACKER MODEL S LINE - SPAIN

3m^3 Feed Hopper / Carbon Steel Depacker

Supermarket Return / Restaurant Waste

PADDLE DEPACKER MODEL S LINE - SPAIN

2.5m^3 Feed Hopper / Carbon Steel Depacker

Cans / Monostreams / Supermarket Waste

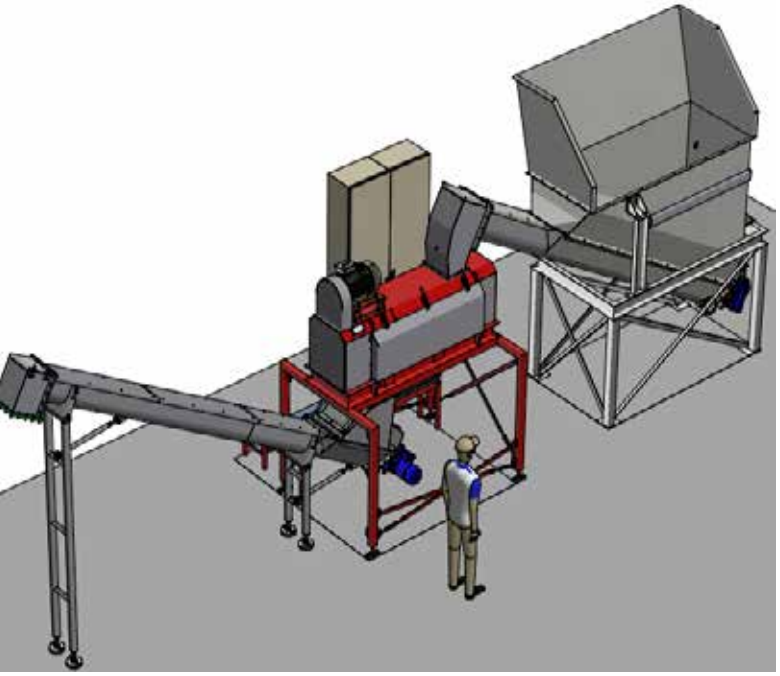

PADDLE DEPACKER MODEL S LINE - ISRAEL

2.5m^3 Feed Hopper / Carbon Steel Depacker

Shampoo / Factory Rejects

T: **1800 441 100**
E: **info@wasteinitiatives.com**